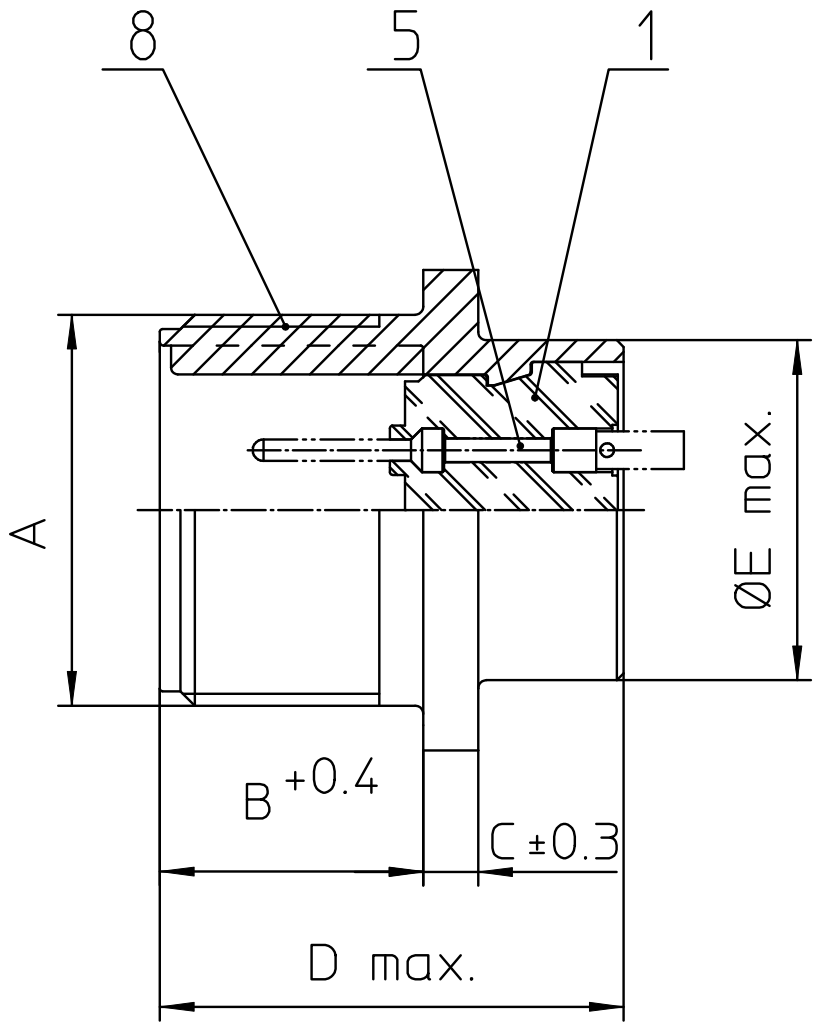

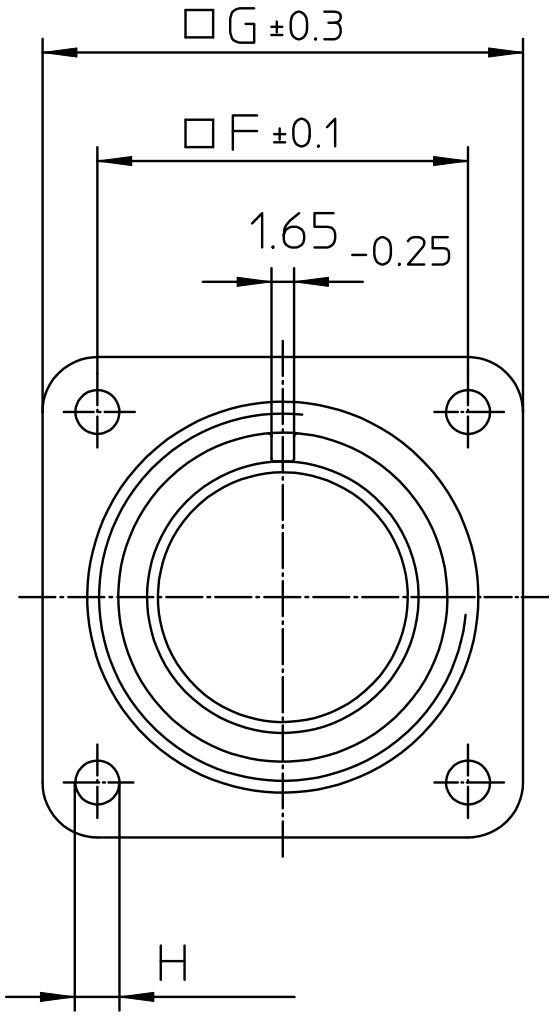

NO.	MASSE / DIMENSION
A	1 3/4-18NS-2A
B	20.6
C	4
D	34.2
E	41.2
F	39.7
G	50.8
H	3.7

NO.	BESCHREIBUNG / DESCRIPTION
1	ISOLIERKÖRPER STIFT / INSULATOR PIN
5	KONTAKTSTIFT/ CONTACT PIN
8	DOSENGEHÄUSE / SHELL

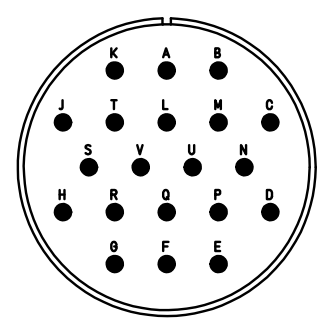

Note: Due to an automatic nomenclature system, numbers generated may not be sequential.

Specification and Dimensions subject to chang
Drawings illustrate normal insulator positioning

Material Specification:	
Shell Material:	Aluminium alloy
Shell Plating:	Olive drab chromate coating over cadmium plating
Insulator Material:	Neoprene
Contact Material:	Copper alloy
Contact Plating:	Hard silver

all dimensions are in mm
Dimensions without tolerance indications are general tolerances in acc. with DIN7168m

drawing for
CUSTOMER

ITT
Engineered for life
ITT CANNON GmbH
D - 71384 Weinstadt/Germany

description CA3102E28-16P-F80
Box mounting receptacle

AWG Crimp / Pin / Layout: 28-16

© All rights reserved. Reproduction or issue to third in any form whatever is only permitted with written authorization of ITT Cannon

page 1/1

revision 209 4. Jan 15