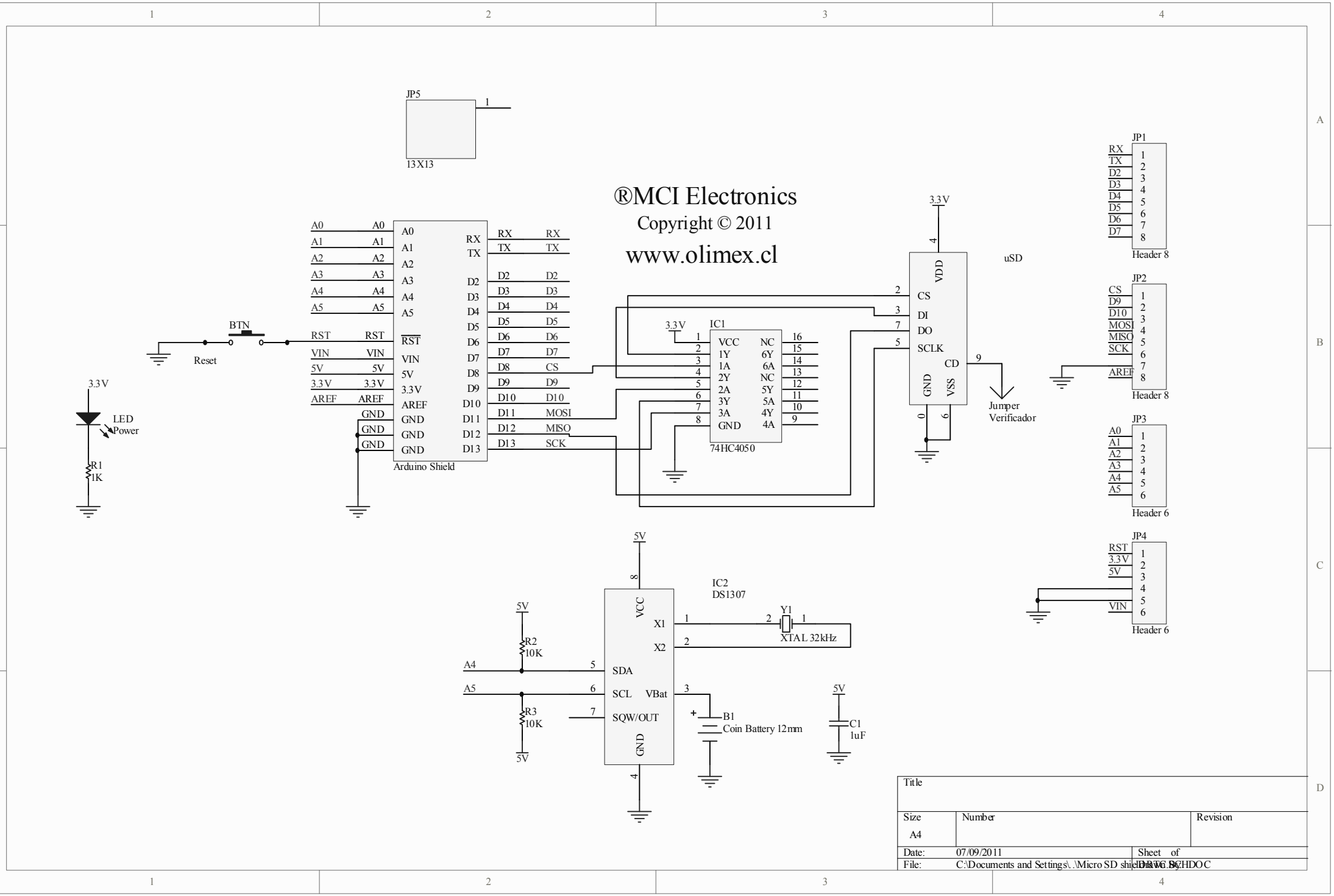
JP5
13X13
®MCI Electronics
Copyright © 2011
www.olimex.cl
BTN
Reset
3.3V
LED
Power
R1
1K
Arduino Shield
A0
A1
A2
A3
A4
A5
RST
VIN
5V
3.3V
AREF
GND
RX
TX
D2
D3
D4
D5
D6
D7
D8
D9
D10
D11
D12
D13
CS
MOSI
MISO
SCK
IC1
74HC4050
VCC
1Y
1A
2Y
2A
3Y
3A
GND
NC
6Y
6A
5Y
5A
4Y
4A
uSD
VDD
DI
DO
SCLK
CD
VSS
Jumper
Verificador
JP1
Header 8
JP2
Header 8
JP3
Header 6
JP4
Header 6
IC2
DS1307
X1
X2
SDA
SCL
VBat
SQW/OUT
Y1
XTAL 32kHz
R2
10K
R3
10K
B1
Coin Battery 12mm
C1
1uF
Title
Size
A4
Number
Revision
Date:
07/09/2011
Sheet of
File:
C:\Documents and Settings\...\Micro SD shield.SCHDOC
Drawn by: