SHEET OF

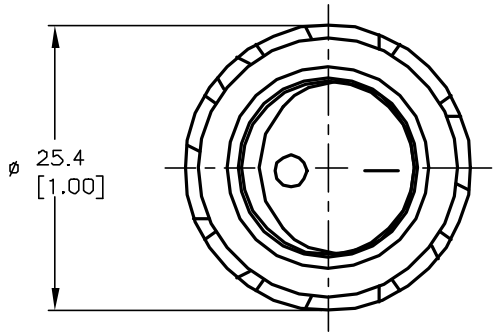

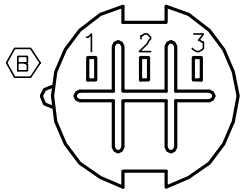

BOTTOM VIEW

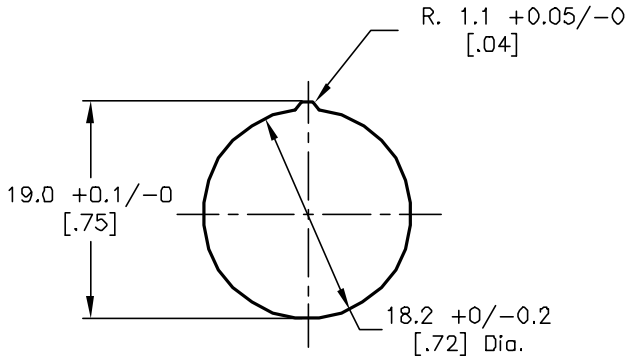

RECOMMEND PANEL MOUNTING
6MM PANEL THICKNESS MAX.

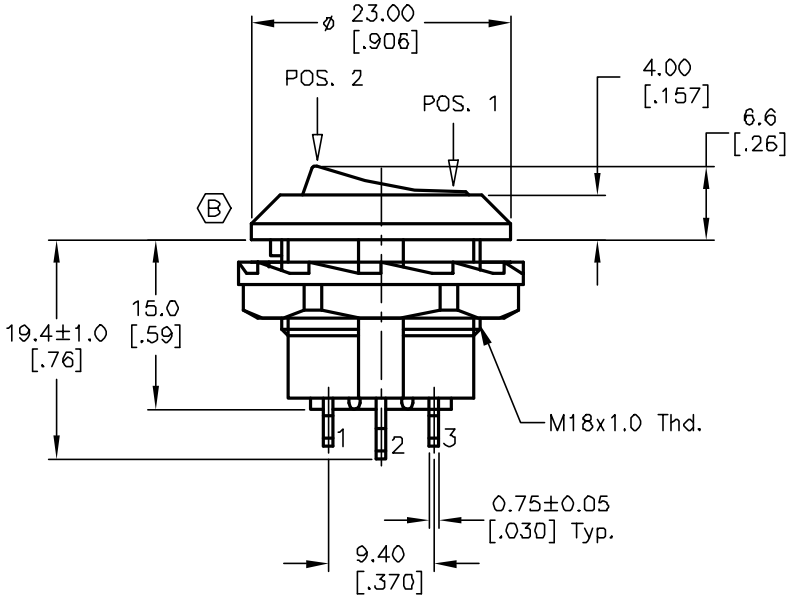

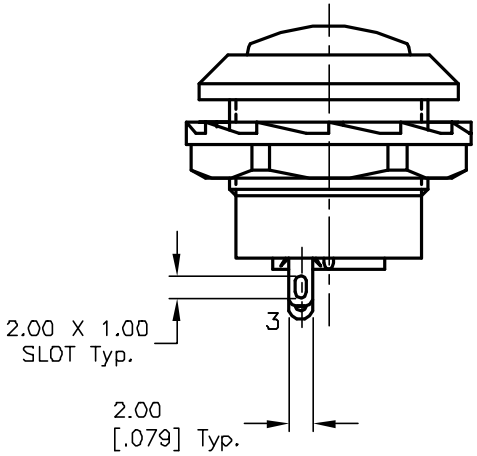

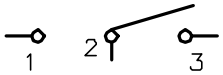

CIRCUIT: SPDT
CONTACT CONFIGURATION

SWITCH FUNCTION	
POS. 1	POS. 2
ON	ON
1–2	2–3

NOTES:

1. ALL DIMENSIONS IN MM [INCH]
2. GENERAL TOLERANCE: X.X=±0.4
   X.XX=±0.25
3. TERM. NOS. FOR REF. ONLY
4. RATING: 10A @125V, 6A @250VAC UL, CUL APPROVED (B)
5. CONTACT RESISTANCE: 50m ohm Max.
6. INSULATION RESISTANCE: DC 500V 100m ohm Min.
7. DIELECTRIC STRENGTH: AC 1500V 1 minute.

REV.	ECN No.	DESCRIPTION	DATE	CHKD
B	13108	ADD ORIENTATION POST	5/6/03	AR
A	10261	RELEASED FOR PRODUCTION		

THE INFORMATION CONTAINED IN THIS DOCUMENT IS PROPRIETARY TO E-SWITCH AND IS NOT TO BE COPIED OR TRANSFERRED

E-SWITCH®

TITLE	SCALE	DATE	DR	DWG	REV
RR3130C WHT "O/I Marking	1.5:1	7/1/99	MM	F030002	B