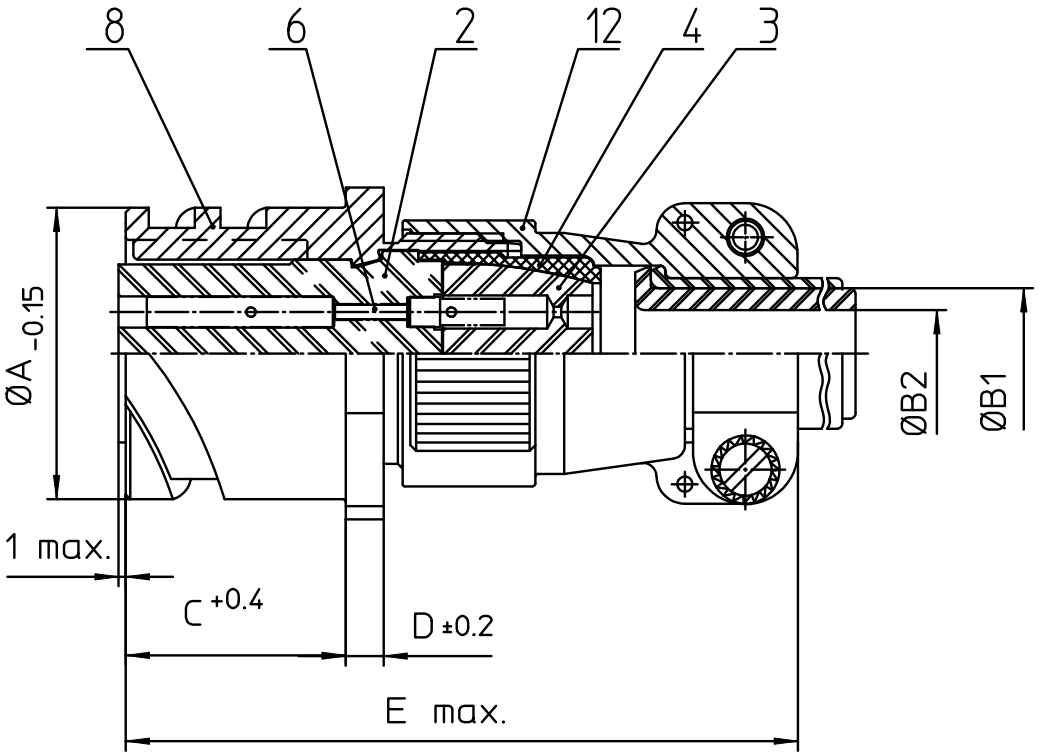

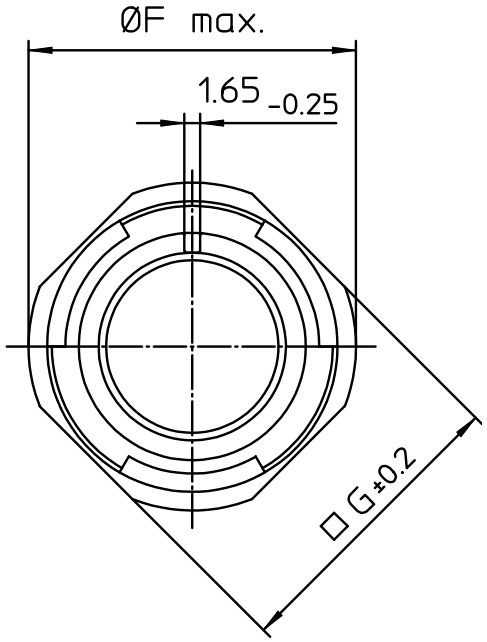

NO.	MASSE / DIMENSION
A	24.6
B1	9.1
B2	-
C	18.2
D	3.2
E	59
F	29.8
G	25.4

NO.	BESCHREIBUNG / DESCRIPTION
2	ISOLIERKÖRPER BUCHSE / INSULATOR SOCKET
3	DICHTKÖRPER / GROMMET
4	ENDRING / ENDRING
6	KONTAKTBUCHSE / CONTACT SOCKET
8	DOSENGEHÄUSE / SHELL
12	ENDGEHÄUSE / ENDBELL

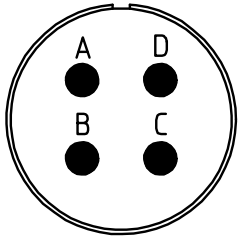

Note: Due to an automatic nomenclature system, numbers generated may not be sequential.

Specification and Dimensions subject to chang
Drawings illustrate normal insulator positioning

Material Specification:	
Shell Material:	Aluminium alloy
Shell Plating:	Olive drab chromate over cadmium (conductive)
Insulator Material:	CR-Elastomere
Contact Material:	Copper alloy
Contact Plating:	Gold 0,5 mµ

all dimensions are in mm
Dimensions without tolerance indications are general tolerances in acc. with DIN7168m

drawing for
CUSTOMER

ITT
Engineered for life
ITT CANNON GmbH
D - 71384 Weinstadt/Germany

description CA3101E14S-2S-B-A176
Cable connecting plug
Endbell with clamp and bushing
Solder Cup / Socket / Layout: 14S-2

© All rights reserved. Reproduction or issue to third in any form whatever is only permitted with written authorization of ITT Cannon

page 1/1

revision 474 4. Jan 15